APPLICABLE STANDARD				
RATING	OPERATING TEMPERATURE RANGE	−55℃ TO +85℃	STORAGE TEMPERATURE RANGE	−10℃ TO +50℃(PACKED CONDITON)
	VOLTAGE	30V AC/DC	OPERATING OR STORAGE HUMIDITY RANGE	RELATIVE HUMIDITY 90%MAX(NOT DEWED)
	CURRENT	0.2A	APPLICABLE CABLE	t=0.2±0.03mm, GOLD PLATING

SPECIFICATIONS

ITEM	TEST METHOD	REQUIREMENTS	QT	AT
CONSTRUCTION				
GENERAL EXAMINATION	VISUALLY AND BY MEASURING INSTRUMENT.	ACCORDING TO DRAWING.	×	×
MARKING	CONFIRMED VISUALLY.		×	×
ELECTRIC CHARACTERISTICS				
VOLTAGE PROOF	90V AC FOR 1 min.	NO FLASHOVER OR BREAKDOWN.	×	×
INSULATION RESISTANCE	100V DC.	50MΩ MIN.	×	×
CONTACT RESISTANCE	AC 20mV MAX (1KHz), 1mA.	100mΩ MAX. INCLUDING FPC BULK RESISTANCE (L=12mm)	×	×
MECHANICAL CHARACTERISTICS				
VIBRATION	FREQUENCY 10 TO 55 Hz, HALF AMPLITUDE 0.75 mm FOR 10 CYCLES IN 3 DIRECTIONS.	① NO ELECTRICAL DISCONTINUITY OF 1μs. ② CONTACT RESISTANCE: 100mΩ MAX. ③ NO DAMAGE, CRACK AND LOOSENESS OF PARTS.	×	—
SHOCK	981 m/s², DURATION OF PULSE 6ms AT 3 TIMES IN 3 DIRECTIONS.		×	—
MECHANICAL OPERATION	10 TIMES INSERTIONS AND EXTRACTIONS.	① CONTACT RESISTANCE: 100mΩ MAX. ② NO DAMAGE, CRACK AND LOOSENESS OF PARTS.	×	—
FPC RETENTION FORCE 1	MEASURED BY APPLICABLE FPC. (THICKNESS OF FPC SHALL BE t=0.20mm AT INITIAL CONDITION.)	DIRECTION OF INSERTION: 0.15 N×n MIN. (note 1)	×	—
ENVIRONMENTAL CHARACTERISTICS				
CORROSION SALT MIST	EXPOSED AT 35±2℃, 5% SALT WATER SPRAY FOR 96h.	① CONTACT RESISTANCE: 100mΩ MAX. ② NO DAMAGE, CRACK AND LOOSENESS OF PARTS. ③ NO EVIDENCE OF CORROSION WHICH AFFECTS TO OPERATION OF CONNECTOR.	×	—
RAPID CHANGE OF TEMPERATURE	TEMPERATURE −55→+15 TO +35→+85→+15TO+35 ℃ TIME 30 → 2~3 → 30 → 2~3 min UNDER 5 CYCLES.	① CONTACT RESISTANCE: 100mΩ MAX. ② INSULATION RESISTANCE: 50MΩ MIN. ③ NO DAMAGE, CRACK AND LOOSENESS OF PARTS.	×	—
DAMP HEAT (STEADY STATE)	EXPOSED AT 40±2℃, RELATIVE HUMIDITY 90 TO 95%, 96h.		×	—

	COUNT	DESCRIPTION OF REVISIONS	DESIGNED	CHECKED	DATE
1	1	DIS-F-003534	SJ.WADA	HS.SAKAMOTO	08.11.20

REMARK

Unless otherwise specified, refer to JIS C 5402.

APPROVED	RI.TAKAYASU	06.11.20
CHECKED	RI.TAKAYASU	06.11.20
DESIGNED	HS.HIRAHARA	06.11.20
DRAWN	HS.HIRAHARA	06.11.20

Note QT:Qualification Test AT:Assurance Test X:Applicable Test

DRAWING NO. ELC4-156646-01

HRS

SPECIFICATION SHEET

HIROSE ELECTRIC CO., LTD.

PART NO. FH26G-67S-0.3SHBW(05)

CODE NO. CL580-1701-0-05 1

FORM HD0011-2-1

SPECIFICATIONS

ITEM	TEST METHOD	REQUIREMENTS	QT	AT
DAMP HEAT, CYCLIC	EXPOSED AT -10 TO +65 ℃ RELATIVE HUMIDITY 90 TO 96 % 10 CYCLES, TOTAL 240h.	① CONTACT RESISTANCE: 100mΩ MAX. ② INSULATION RESISTANCE: 1MΩ MIN. (AT HIGH HUMIDITY) ③ INSULATION RESISTANCE: 50MΩ MIN. (AT DRY) ④ NO DAMAGE, CRACK AND LOOSENESS OF PARTS.	×	—
DRY HEAT	EXPOSED AT 85±2℃, 96h.	① CONTACT RESISTANCE: 100mΩ MAX. ② NO DAMAGE, CRACK AND LOOSENESS OF PARTS.	×	—
COLD	EXPOSED AT -55±3℃, 96h.		×	—
SURPHUR DIOXIDE [JIS C 0090]	EXPOSED AT 40±2℃, RELATIVE HUMIDITY 80±5 %, 25±5 PPM FOR 96h.	① CONTACT RESISTANCE: 100mΩ MAX. ② NO DAMAGE, CRACK AND LOOSENESS OF PARTS. ③ NO EVIDENCE OF CORROSION WHICH AFFECTS TO OPERATION OF CONNECTOR.	×	—
HYDROGEN SULPHIDE [JIS C 0092]	EXPOSED AT 40±2℃, RELATIVE HUMIDITY 80±5 %, 10 ～ 15 PPM FOR 96h.		×	—
SOLDERABILITY	SOLDERED AT SOLDER TEMPERATURE, 235±5℃ FOR IMMERSION DURATION, 2±0.5 sec.	A NEW UNIFORM COATING OF SOLDER SHALL COVER A MINIMUM OF 95 % OF THE SURFACE BEING IMMERSED.	×	—
RESISTANCE TO SOLDERING HEAT	1) REFLOW SOLDERING: PEAK TMP. 250℃MAX. REFLOW TMP. 230℃ MIN FOR 60 sec. 2) SOLDERING IRONS: TMP. 350±10℃ FOR 5±1 sec.	NO DEFORMATION OF CASE OF EXCESSIVE LOOSENESS OF THE TERMINALS. (note 2)	×	—

(note 1)

THIS PRODUCT HAS FLIP-LOCK CONSTRUCTION. FASTEN FPC ON PCB OR SOMETHING FIXED IF FORCE IN VERTICAL DIRECTION SHALL BE PREDICTED.

(note 2)

BLISTERS WHICH MAY OCCUR IN HOUSING DO NOT AFFECT PRODUCT PERFORMANCE.

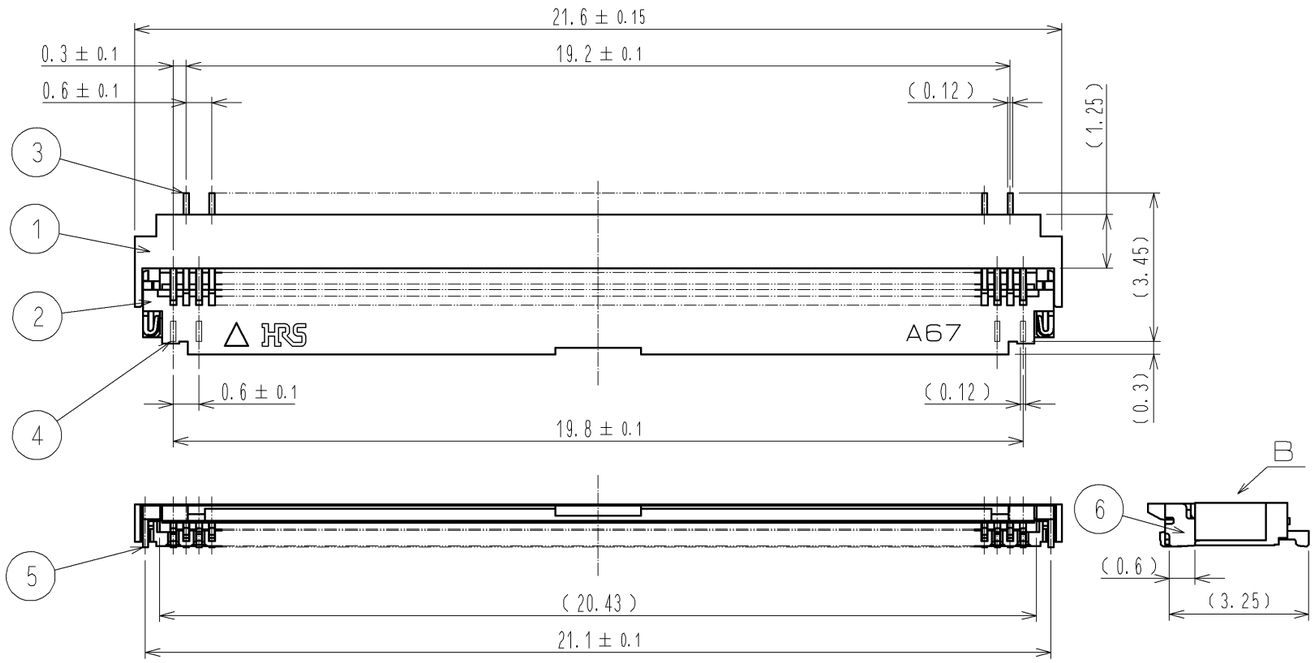

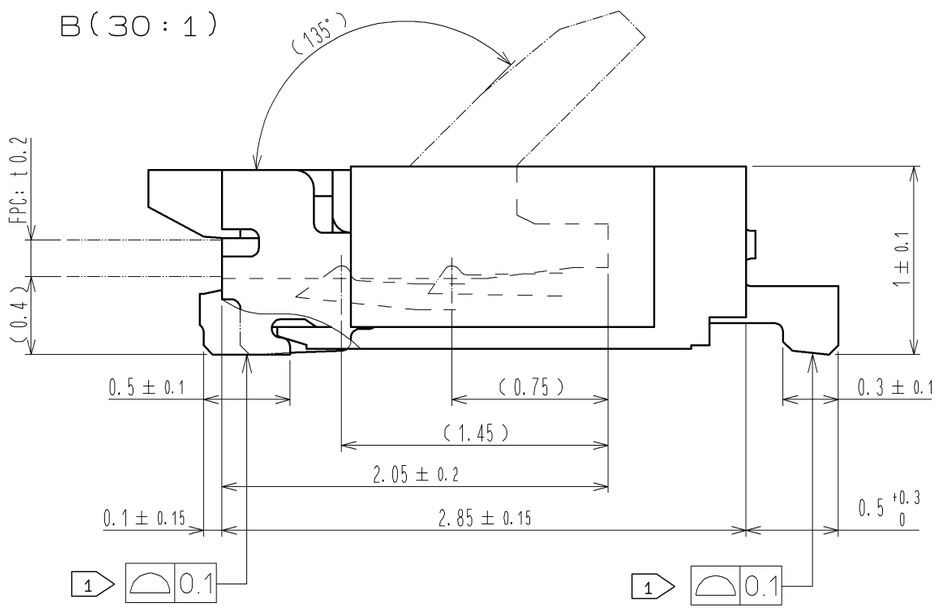

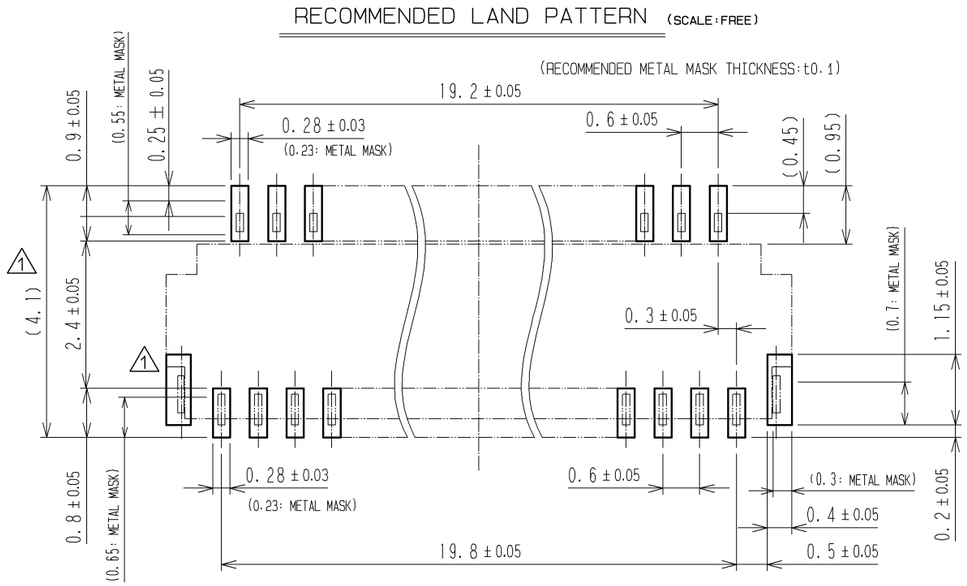

NOTE 1 LEAD CO-PLANARITY INCLUDING REINFORCED METAL FITTINGS SHALL BE 0.1 MAX.
2 TO BE DELIVERED WITH TAPE AND REEL PACKAGES.
SEE ATTACHED PACKAGING SPECIFICATIONS FOR DETAILS.
3 NOTE THAT PREVENTIVE HOLE FOR SINK MARK COULD BE ADDED FOR IMPROVEMENT.
THE QUALITY REMAINS GOOD, EVEN WITH THE DARK SPOTS, WHICH COULD OCCASIONALLY OCCUR ON MOLDED PLASTIC.

部番	材質	処理，備考	部番	材質	処理，備考
			10	(CONNECTOR)	
			9	POLYSTYRENE	
			8	POLYESTER	
			7	POLYSTYRENE	
4	PHOSPHOR BRONZE	GOLD PLATING 0.05μmMIN OVER NICKEL 1μmMIN	6	PHOSPHOR BRONZE (PLATED MATERIAL)	TIN PLATING(REFLOW FINISHED) 1μm MIN OVER COPPER 0.5μmMIN
3	PHOSPHOR BRONZE	GOLD PLATING 0.05μmMIN OVER NICKEL 1μmMIN			
2	PA	DEEP BROWN UL94V-0	5	PHOSPHOR BRONZE (PLATED MATERIAL)	TIN PLATING(REFLOW FINISHED) 1μm MIN OVER COPPER 0.5μmMIN
1	LCP	BEIGE UL94V-0			

UNITS	SCALE	△の数	訂正記事	設計	検図	年月日
mm	7 : 1	1 2	DIS-F-003534	SJ.WADA	HS.SAKAMOTO	08.11.20

HIROSE ELECTRIC CO., LTD.

承認	RI.TAKAYASU	06.11.22	図番： EDC3-156646-01
検図	RI.TAKAYASU	06.11.22	製品名： FH26G-67S-0.3SHBW(05)
設計	HS.HIRAHARA	06.11.22	
製図	HS.HIRAHARA	06.11.22	製品コード CL580-1701-0-05 △1 1/5

RECOMMENDED FPC(FREE)

(SCALE:FREE)

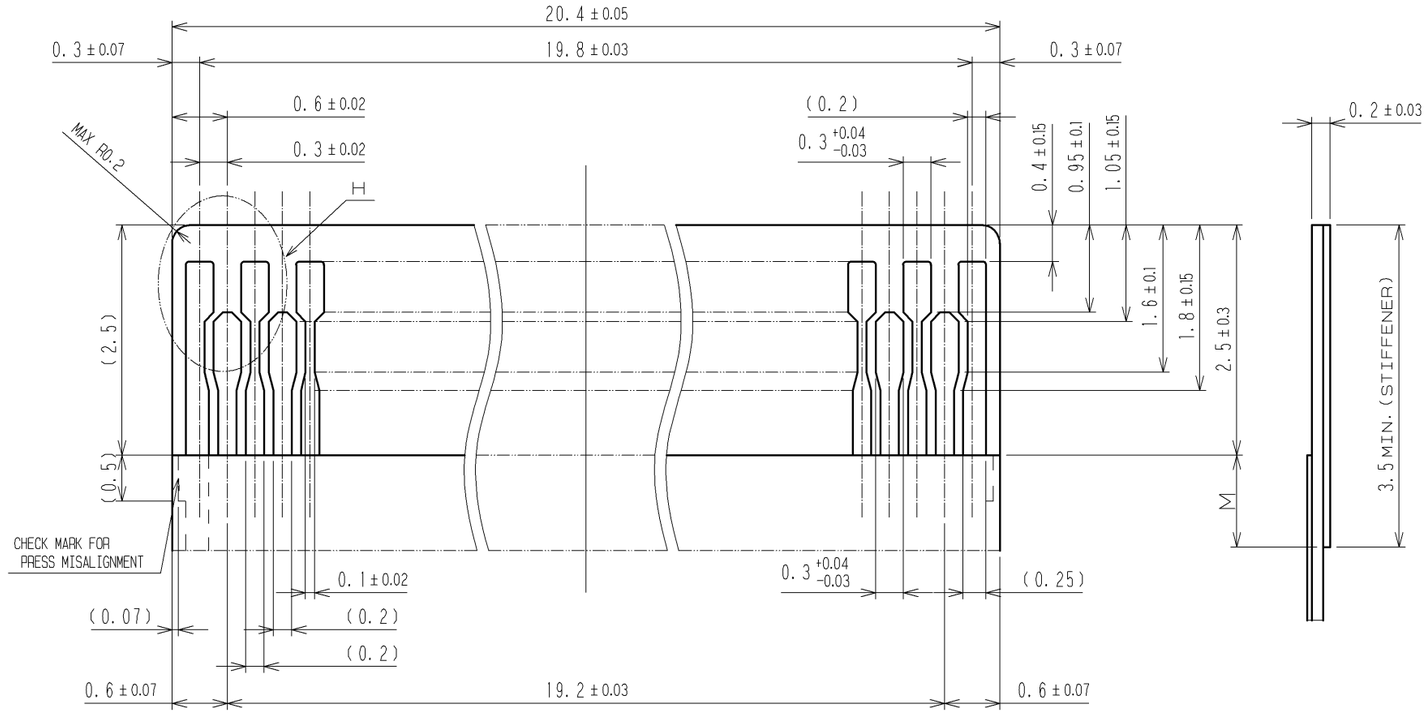

DIMENSION M MUST BE 0.5mm MINIMUM WHEN THE STIFFENER IS SHORTER THAN 3.5mm.

H(30:1)

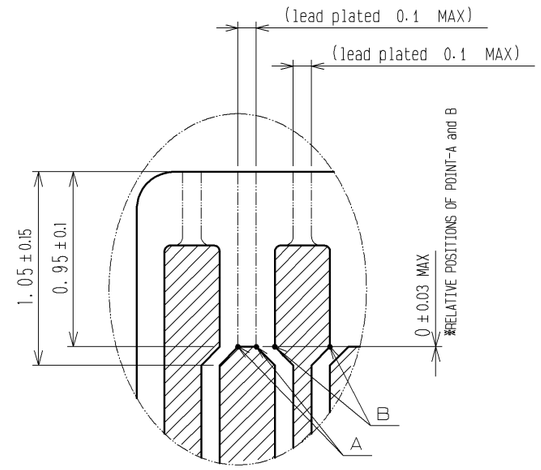

FPC CONSTRUCTION Recomended Specifications

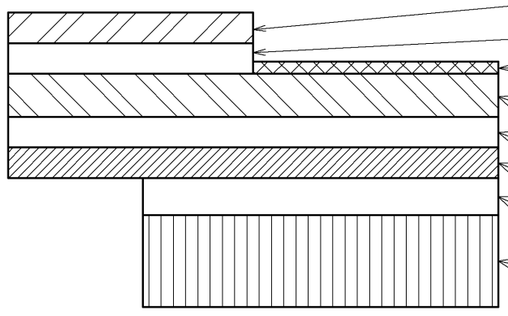

MATEROAIAL NAME	MATERIAL	THICKNESS(μm)
COVERING FILM LAYER.	POLYIMIDE 1mil thick.	25
COVER ADHESIVE		25
SURFACE TREATMENT	1μm TO 5μm NICKEL UNDERPLATED 0.2μm GOLD PLATED.	(3)
COPPER FOIL	Cu 1 oz	35
BASE ADHESIVE	HEAT-HARDENED ADHESIVE	25
BASE FILM	POLYIMIDE 1mil thick	25
REINFORCEMENT MATERIAL ADHESIVE	HEAT-HARDENED ADHESIVE	40
STIFFENER	POLYIMIDE 3mil thick	75

DRAWING NO.	EDC3-156646-01
PART NO.	FH26G-67S-0.3SHBW(05)
CODE NO.	CL580-1701-0-05

1 2/5

EMBOSSED CARRIER TAPE DIMENSION (2:1)

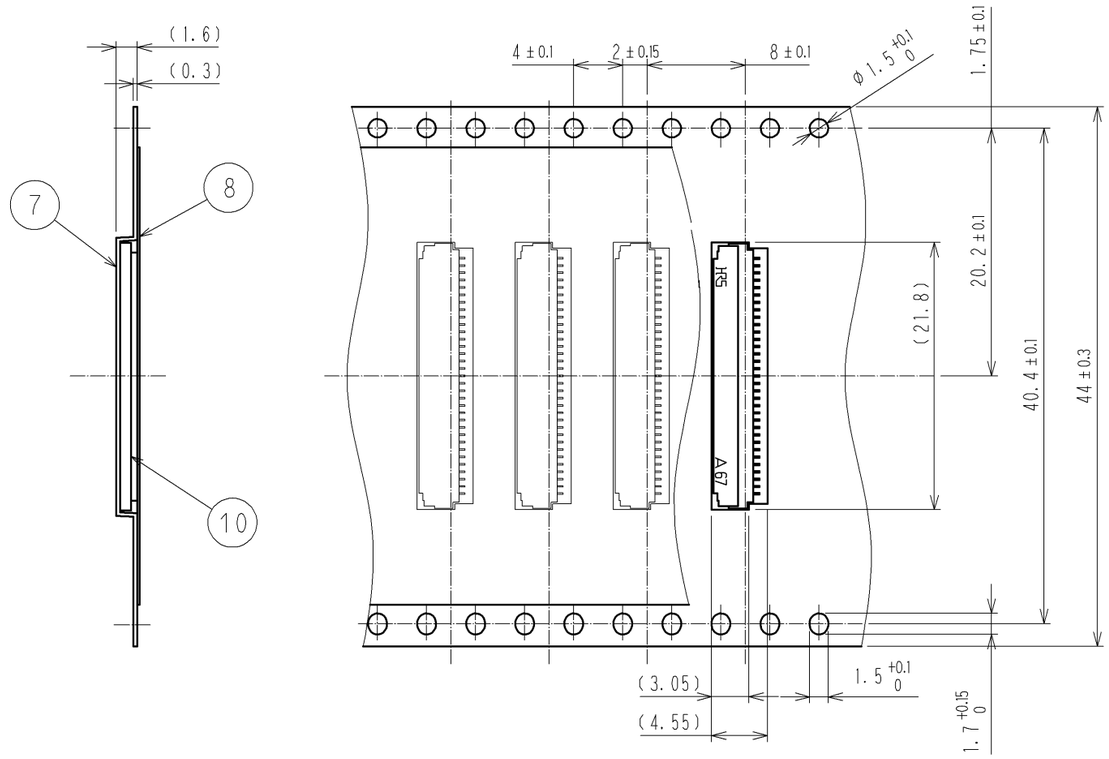

DIRECTION OF UNREELING

REEL DIMENSION (FREE)

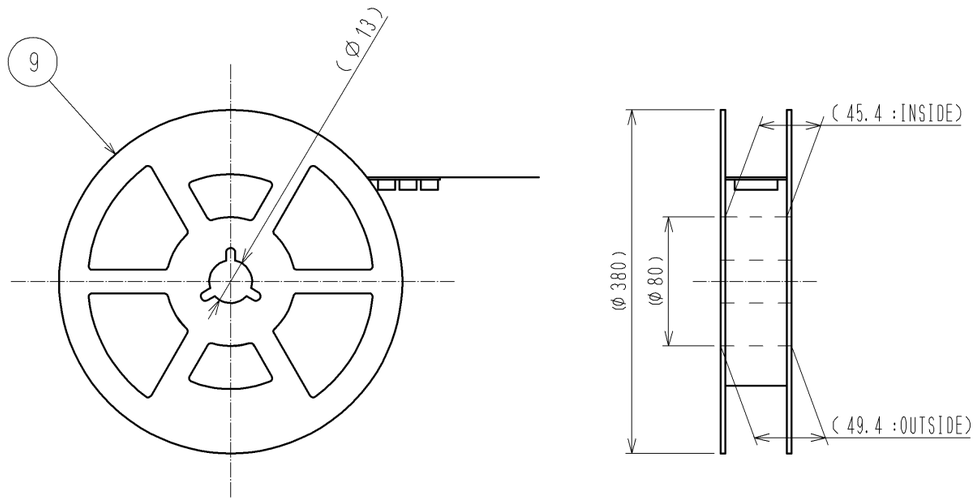

NOTE 1 THE DIMENSIONS IN PARENTHESES ARE FOR REFERENCE.

2 PER REEL : 5000 CONNECTORS.

3 REFER TO JIS C 0806 (PACKAGING OF COMPONENTS FOR AUTOMATIC HANDLING.)

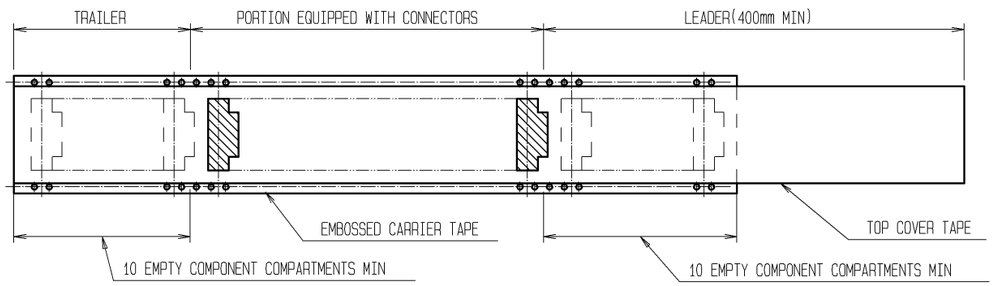

<DRAWING FOR PACKING>

HRS	図番：	EDC3-156646-01
	製品名：	FH26G-67S-0.3SHBW(05)
	製品コード	CL580-1701-0-05 △1 3/5

This connector is small and thin and requires delicate and careful handling.
Read through the instructions shown below and handle the connector properly.
Each values indicating here are for reference and may differ from standard value.

[INSTRUCTIONS FOR MOUNTING ON THE BOARD]

♦Warp of Board
Minimize warp of the board as much as possible.
Lead co-planarity including reinforced metal fittings is 0.1 mm or less.
Too much warp of the board may result in a soldering failure.

♦Load to Connector
Do not apply a force of 0.5 N or more to the connector before mounting it on the board.
Otherwise, the connector may be broken.
Do not insert the FPC or operate the connector before mounting it.

♦Load to Board
·Splitting a large board into several pieces
·Screwing the board
Avoid the handling described above so that no force is exerted on the board during the assembly process.
Otherwise, the connector may become defective.

♦Amount of Warp
The warp of a 100-mm wide board should be 0.5 mm or less.
The warp of board suffers stress on connector and the connector may become defective.

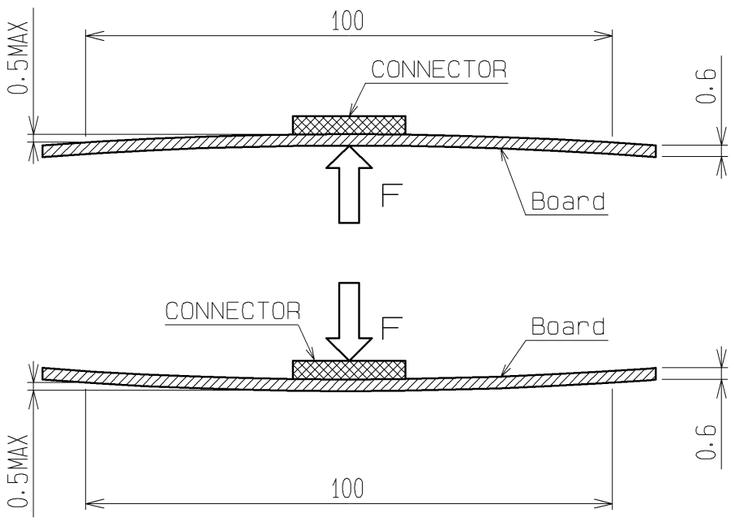

[INSTRUCTIONS ON INSERTING FPC AND CONNECTION]

♦ Use of the actuator
1. Be very careful not to apply excessive force when releasing the actuator in the initial position (with no FPC inserted).
If you use your nail or finger as shown below, the terminals may be deformed.

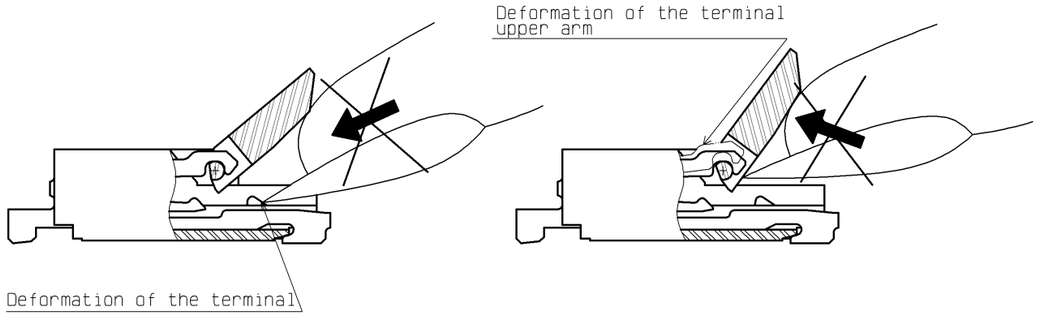

Example1. Example2.

2. The actuator rotates around the rotational axis as shown below.
Rotate the actuator.

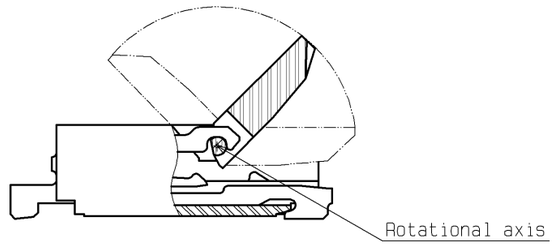

3. The actuator will not open more than 135°.
Do not apply any force backward beyond this point.
Otherwise, the actuator may come off or break.

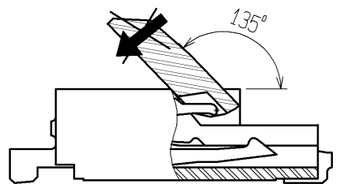

HRS	DRAWING NO.	EDC3-156646-01
	PART NO.	FH26G-67S-0.3SHBW(05)
	CODE NO.	CL580-1701-0-05

4. Move the actuator at approximately the center.
5. Do not pinch or pick the actuator to lift it as shown below. Otherwise, it may break.
   (Do not carry out any operation other than rotating the actuator as shown in 2 above.)

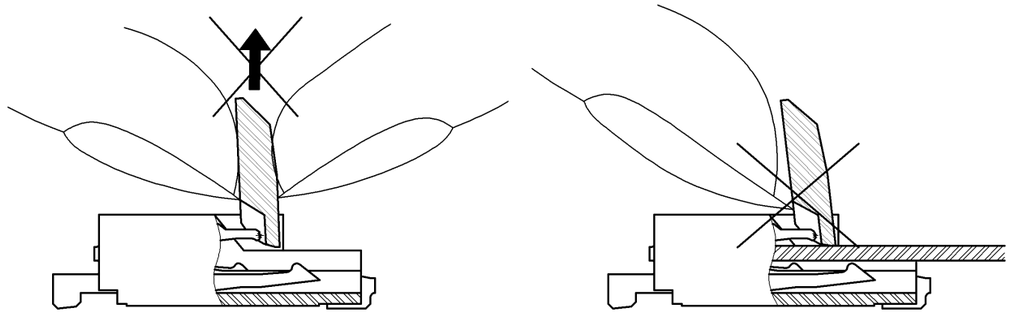

♦Direction of Contacts
This connector has contacts on the bottom. Thus, insert it with the exposed conductors face down.

♦Inserting the FPC
1. Insert the FPC horizontally along the surface and at a right angle to the connector.
   Insert it properly to the very end.
   If the FPC is inserted at a slant (incorrectly),
   the conductors may short-circuit due to pitch shift or the edge of the FPC may catch in the terminals,
   resulting in deformation of the terminals.
   This connector has a ZIF structure, and its effective engagement length is 0.35 mm
   (when the recommended FPC nominal is used).
   Use the actuator carefully to prevent the FPC from dislocating after inserting it.

2. Do not insert the FPC diagonally from above.
   If the FPC is inserted at a slant (incorrectly) as shown below in the FPC insertion process,
   the FPC may bend and patterns may break or the FPC may not insert completely,
   resulting in improper conduction.

※Keep a sufficient FPC insertion space in the stage of the layout in order to avoid incorrect FPC insertion.
Besides, it is not difficult to insert FPC correctly all the way to the end.
Design the proper layout of parts.

※Make adjustments with the FPC manufacturer for FPC bending perfomance and wire breakage.

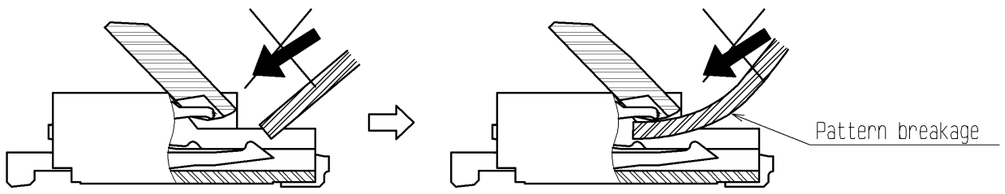

♦Checking the Locking Condition
In the locked condition, make sure that the actuator is horizontal on the board surface.
Do not apply excessive force to it near the 0° position of the actuator.
Otherwise, the terminals may be deformed. (Allowable force: 1 N or less)

【INSTRUCTIONS ON FPC LAYOUT AFTER CONNECTION】

♦Load to FPC
Be very careful not to apply any force to the FPC after inserting it.
Otherwise, the connector may become unlocked or the FPC may break.
Fix the FPC, in particular, when loads are applied to it continuously.
Design the FPC layout with care not to bend it sharply near the insertion opening.

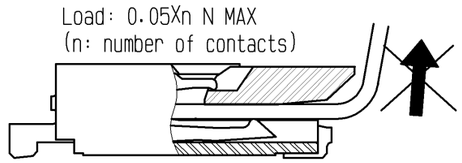

【INSTRUCTIONS ON REMOVING FPC】

♦Release the actuator to remove the FPC.

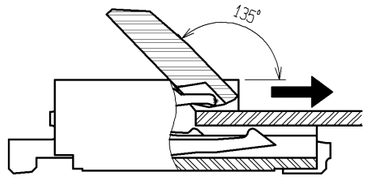

【OTHER INSTRUCTIONS】

♦Instructions on Manual Soldering
Follow the instructions shown below when soldering the connector manually during repair work, etc.
1. Do not perform reflow soldering or manual soldering with the FPC inserted into the connector.
2. Do not heat the connector excessively. Be very careful not to let the soldering iron contact
   any parts other than connector leads. Otherwise, the connector may be deformed or melt.
3. Do not use excessive solder (or flux).
   If excessive solder (or flux) is used on the terminals, solder or flux may adhere to the contacts
   or rotating parts of the actuator, resulting in poor contact or a rotation failure
   of the actuator.
   Supplying excessive solder to the reinforcing bracket may hinder actuator rotation,
   resulting in breakage of the connector.

HRS	DRAWING NO.	EDC3-156646-01
	PART NO.	FH26G-67S-0.3SHBW(05)
	CODE NO.	CL580-1701-0-05 △1 5/5